MAFAC
Parts Cleaning. Systems and Solutions.

Press information

Short profile

Aqueous-based parts cleaning systems

MAFAC is one of the leading manufacturers in aqueous parts cleaning worldwide. The family-managed company offers a wide range of compact serial machines for various cleaning jobs, for example in the automotive and aerospace industry, in machine building, metal-cutting production, or in the supplier industry.

At the heart of all MAFAC products is the unique, patented process of counter- or co-rotation of the basket receptacle and spray system. It allows for the use of directly targeted turbulences; combining mechanical movement with temperature, time and cleaning agents, it provides for reliable and effective parts cleaning.

Compact, versatile products

The MAFAC product portfolio comprises compact machines for spray cleaning or combined spray-flood cleaning. The machines feature a selection of options, for instance the patented, rotatable and positionable ultrasound technology, for adaptation to the customer's individual requirements. Depending on the machine type, drying is implemented by means of a rotating pulse blowing system, a stationary or rotary hot-air drying system, or vacuum drying. A diversified selection of accessories completes the range of machines and adds to the ergonomic and safe operation of the cleaning process. Accessories include transfer systems, roller conveyors and loading trolleys, but also standard Euro baskets or customised workpiece carriers as well as drip trays and bath care systems.

Spray cleaning machines:
MAFAC PURA
MAFAC-KEA

MAFAC-ELBA
Spray-flood cleaning machines:
MAFAC JAVA
MAFAC PALMA
MAFAC MALTA
The latest MAFAC product innovations are vector kinematic processes for the optimal application on complex geometries, the process for targeted cleaning and drying, the heat exchange module MAFAC HEAT.X, and the cleaning machine MAFAC MALTA for particle-free degreasing of precision parts.

Continuous research for a high degree of innovation
MAFAC's strong commitment to research and development not only guarantees the continuous improvement of the products, but also forms the basis of the company's technology leadership. This is evident from several pending patent applications. Due to its competence in product development, MAFAC is an esteemed research partner of well-known universities, as for example in the project "ETA factory" (energy-efficient model factory of the future) of Darmstadt Technical University.

Responsibility for people and the environment
The aspect of sustainability is firmly rooted in MAFAC’s corporate values. The manufacturer from Alpirsbach has consistently focussed on aqueous parts cleaning, constantly developing solutions for meeting the increasing requirements in cleanliness in an economic and resource-saving manner.

Service tailored to customers' needs
MAFAC offers its customers an extensive service package covering process implementation, support, and optimisation. An experienced team of engineers and technicians defines the customer's requirements in the cleaning process. By means of test series and test cleaning runs at our own technical centre, the process is optimised for the customer. Following the installation and commissioning of a MAFAC parts cleaner, after-sales service ensures that machine and process are always state-of-the art and operate with optimum safety, cost effectiveness and efficiency.

Images

MAFAC-Gesellschafter.jpg

From left to right: The two managing partners Joachim and Rainer Schwarz. The sons of company founder Ernst Schwarz have played an important role in shaping MAFAC since 1993. Until 1st January 2019, Joachim Schwarz was head of Research & Development and Production. Rainer Schwarz has been the head of Market and Finances since 1993.

MAFAC-Stabuebergabe.jpg

On 1st January, Joachim Schwarz (left) handed over the Technical Management to Stefan Schaal.

MAFAC-Geschaeftsleitung.jpg

The MAFAC management since 1st January 2019: Managing partner Joachim Schwarz (left) is responsible for the strategic and sustainable development of the company as well as the strategic advance development and innovation of new products and processes. Technical Managing Director Stefan Schaal (centre) is responsible for Research & Development and Production. Commercial Director Rainer Schwarz (right) is responsible for Market and Finances.

MAFAC-second management level.jpg

Since the beginning of 2017 an integral part of management: The team of seven at the second management level. The two MAFAC managing directors Rainer Schwarz (front left) and Joachim Schwarz (back right) as well as managing partner Joachim Schwarz (front right) with the members of management from left to right: Klaus Bergmann (Head of Production), Thomas Gutmann (Head of Customer Support), Wilhelm Irion (Authorised Representative, Commercial Director), Bettina Kern (Head of Marketing and Sales), Armand Oostendorp (Head of Product Management), Frank Kilgus and Stefan Schaal (Head of Development and Design), and Peter Ruoff (Head of Marketing and Sales).

MAFAC-PURA.jpg

The new MAFAC PURA is the entry-level model in the MAFAC product range. The single-tank spray-cleaning machine is suitable for quick and easy component cleaning.

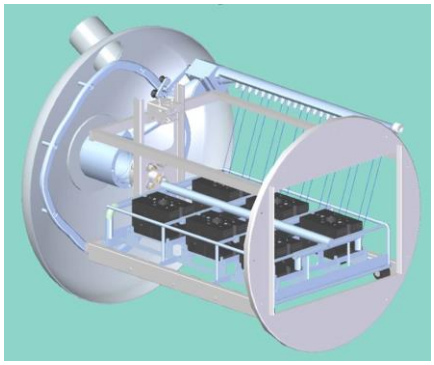

MAFAC-Vektorkinematik.jpg

The MAFAC vector kinematics process, introduced in 2018, permits a wide range of different angles for the application onto the component surfaces.

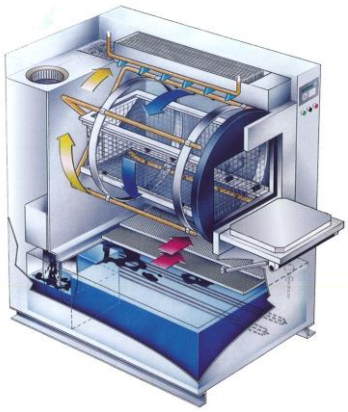

MAFAC-Rotation principle.jpg

The principle of rotation of basket and spray system, unequalled so far, forms the basis of all MAFAC machines.

MAFAC-Production.jpg

All MAFAC machines are manufactured at the Alpirsbach site. Experience and precision are what counts in production.

MAFAC Technical Centre.jpg

With the assistance of the applications consultants at the MAFAC technical centre in Alpirsbach, process solutions are individually matched to customer requirements in advance.

MAFAC-Components.jpg

The compact MAFAC parts washers also meet extremely demanding requirements, such as the cleaning of concealed internal contours.

About MAFAC
MAFAC is one of the leading manufacturers in aqueous parts cleaning. The company offers a wide range of compact series machines for a large variety of cleaning requirements tailored to customers' requirements, for example in the automotive and aerospace industry, in machine building, metal-cutting production, hydraulic and medical engineering, and in the electrical industry. All machines are developed and manufactured at Alpirsbach in the Black Forest, at present with a staff of more than 100 employees. Founded in 1968, MAFAC has been involved in industrial parts cleaning since 1974 and has focused on this field since 1990. The patented cleaning technology of counter- or co-rotating spray system and basket receptacle system sets new standards in terms of cleanliness and efficiency. The company is globally active with a network of technical agencies and a branch establishment in France.

For more information on aqueous parts cleaning and on MAFAC, please go to: www.mafac.de

Contact for editorial staff:

MAFAC – E. Schwarz GmbH & Co. KG

Bettina Kern, Head of Marketing and Sales
Max-Eyth-Straße 2
D-72275 Alpirsbach
Phone: +49 (0) 74 44 / 95 09-603
E-mail: bettina.kern@mafac.de

PR agency for MAFAC

PR-Schmiede
Monika Andreasch
Löwenstraße 74/3
D-70597 Stuttgart
Phone: +49 (0) 172 530 1873
E-mail: monika.andreasch@prschmiede.d