MAFAC
Parts Cleaning. Systems and Solutions.

Heat exchange module for hot water
MAFAC **HEAT.X**

Technical specifications

Benefits of using a heat exchange module

Potential reduction of the power consumption for bath heating by more than 90%.

Electricity tax refund if you implement energy management systems (DIN EN ISO 50001) and/or environmental management systems (DIN EN ISO 14001).

Reduction of CO_2 emissions (617 g CO_2/kWhEnd referred to the GEMIS energy mix Germany).

Distinct reduction of the connected load of the machine (if heated only with water).

Fast availability of technical heat thanks to the highly integrated power density in the heat exchanger.

No waste of existing heat because sources of warm production water are used.

The heat exchange module MAFAC HEAT.X provides an alternative to the electrical heating of cleaning agents: the utilisation of available external heat.
The module works with a highly efficient heat exchange process. The available heating agent flows through a coaxial heat exchanger, while the cleaning agent to be heated is fed to the same heat exchanger but runs through a separate coaxial pipe. In counterflow principle, the heating agent warms up the cleaning agent by means of direct heat transmission. The cleaning agent is then returned to the cleaning process.
In this way, electricity for heating may be replaced by alternative energy sources:

- Use of hot water from heat treatment (e.g. foundries)
- from cogeneration
- generation of regenerative hot water by solar thermal energy

The heat exchange module can also be operated in mixed operation with electricity and water and can be connected to a wide range of machines, not only to MAFAC cleaning machines. Whether you are preparing for the purchase of a new machine or the execution of a major project, our project planning department will be glad to develop an individual solution.

Requirements on customer-side heat supply:

Prerequisite:	Hot water supply in liquid state (no steam)
Nominal output of the MAFAC HEAT.X	24 kW with a heat-side flow volume of 1.4 m³/h and a temperature difference between flow and return flow of 15 K
Flow (inlet provided by customer)	Temperature from 100 °C to max. 130 °C Pressure min. 6 bar to max. 16 bar
Return flow	Temperature min. 10 °C above bath temperature
Temperature difference flow/return flow (mean value)	min. 10 K
Dimension in mm	W 700, D 535, H 1400

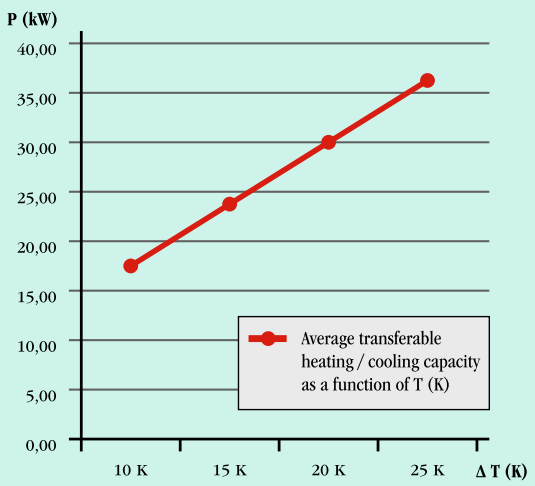

Standard equipment

General	Machine-side	Heat supply side
Heat exchange system in coaxial pipe technology with inverse water flow	Circular pump for process water	Analogue temperature display for hot water
Robust, self-cleaning, low-maintenance heat exchange process	One-way restrictor	Regulating stop valve
Sheet steel housing painted in RAL 7035	Suction filtration 1,000 µm	Manual stop ball valve
High-quality insulation of all fluid-carrying components	Ventilation connection	Drain connection / system draining

Heating options for the parts washer:

purely electrical	Heating by means of the electrical heating integrated in the parts washer
purely thermal	Heating with the MAFAC HEAT.X - here the technical heat provided by the customer is used.
hybrid-driven	Heating by means of hybrid operation - here the technical heat is used in combination with the electrical heating. Can be selected via the machine operating panel.

Designs

Standard	The available technical heat provided by the customer continuously flows through the heat exchange module.
Design with shut-off function	The technical heat provided by the customer is only conveyed through the heat exchange module whenever heat is required. Thus, no technical heat is wasted.
Design with regulated specified return flow temperature	The available technical heat is regulated to the specified desired return flow temperature in the heat exchange module and is returned to the customer's power supply.

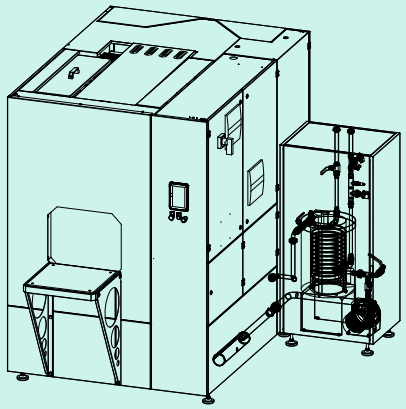

Fig.: The heat exchange module MAFAC HEAT.X, connected to a MAFAC JAVA parts washer

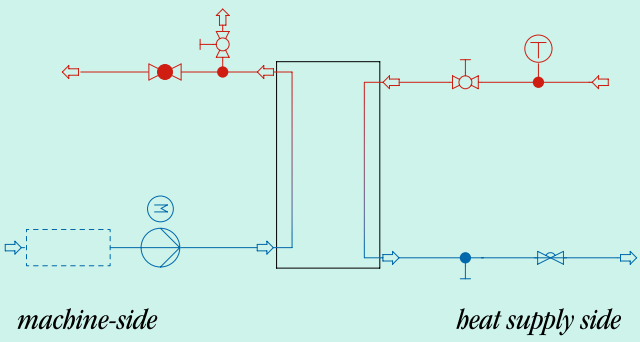

Fig.: Thermal design flow chart

Options

- The energy monitoring feature provides you with a constant overview of consumption.
- Additional filtration unit for extension of the useful life of the agents required for the cleaning process.
- Retrofit kits are available to connect the heat exchange system to your machines.
- Mixed process operation possible (electrical and water heating).
- Chemical rinsing units for removal of contamination films in the pipe system and in the heat exchanger.

Energy monitoring

- Integrating an additional heat meter enables you to measure the input and output temperature of the technical heat.
- The kilowatt hours consumed are metered by means of volume flow measurement and are transmitted to the machine control system.

Filtration unit

- For ultrafine filtration of the agents required for the cleaning process. It optimises and extends the service life of the complete volume of agents.
- To reduce a continuous contamination of the coaxial heat exchanger; this ensures the heat exchanger operates at a high efficiency and permits the time intervals of the rinsing cycles to be increased.

Chemical rinsing unit

- Chemical rinsing unit for aqueous or chemical back-rinsing for removal of contamination films in the pipe system and in the heat exchanger.
- Consisting of: Circular pump and tank for the rinsing chemicals with a content of approx. 60 litres.

To retrofit a MAFAC HEAT.X to your existing machine, please contact our Service.
We will inform you which options are suitable for your application.

Service-Hotline:

Phone:	Fax:	E-mail:
+49 7444 9509-23	+49 7444 9509-969	service@mafac.de

MAFAC
Parts Cleaning. Systems and Solutions.

MAFAC - E. Schwarz GmbH & Co. KG
Max-Eyth-Straße 2, D-72275 Alpirsbach
Phone: + 49 (0) 74 44 / 95 09-0, Fax: 95 09 - 99
E-mail: info@mafac.de, www.mafac.de

MAFAC HEAT.X 08/2017. Subject to technical changes.